THE PURPOSE OF THIS STANDARD IS TO DEFINE THE REQUIRED COUNTERSINK GEOMETRY FOR SHAFT CENTERS IN ORDER TO MAINTAIN COMPATIBILITY WITH FACE DRIVER TOOLING. THE OUTSIDE DIAMETER OF THE COUNTERSINK MUST BE CONTROLLED TO ENSURE PROPER ENGAGEMENT AND ACTUATION OF THE FACE DRIVER ARBOR.

THE FOLLOWING DESIGN GUIDE ESTABLISHES THE STANDARD COUNTERSINK DIMENSIONS FOR COMMONLY USED TAP SIZES.

THIS APPLIES TO ALL SHAFTS MANUFACTURED FOR OR BY CORNELL PUMP CO.

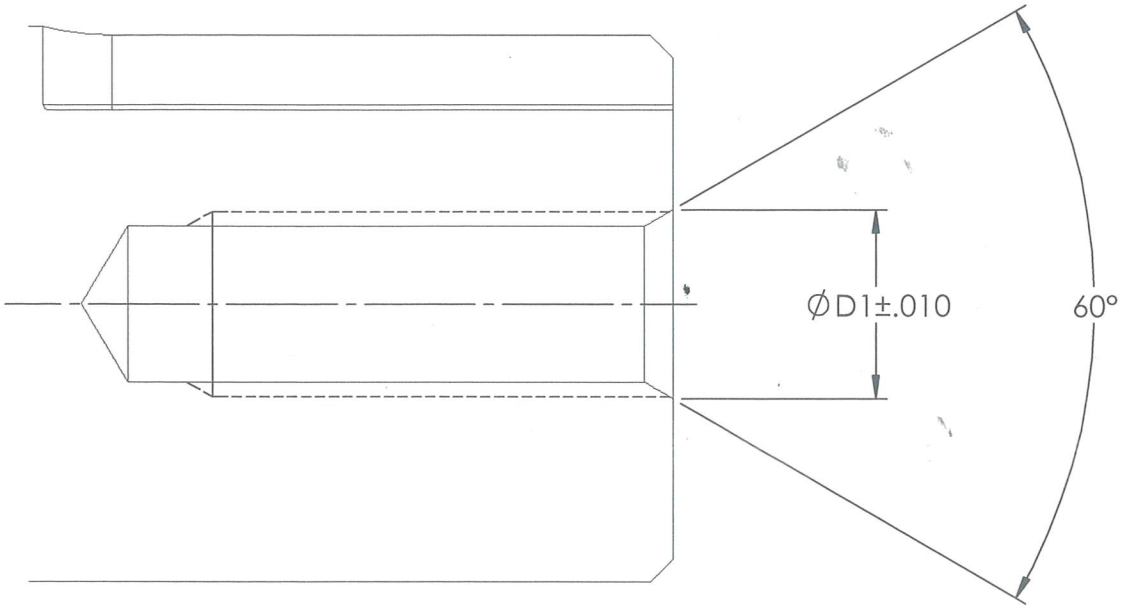

Ø .XX ↧ X.XX
TAP SIZE UNC ↧ X.XX
∨ Ø D1 ±.010 X 60°, NEAR SIDE

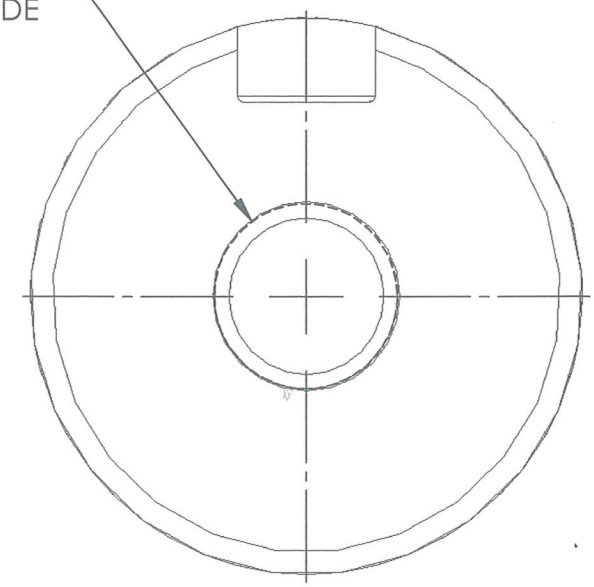

TAP SIZES	ØD1
3/8"-16	.395
1/2"-13	.510
5/8"-11	.645
3/4"-10	.765
1"-8	1.010
1-1/8"-7	1.140